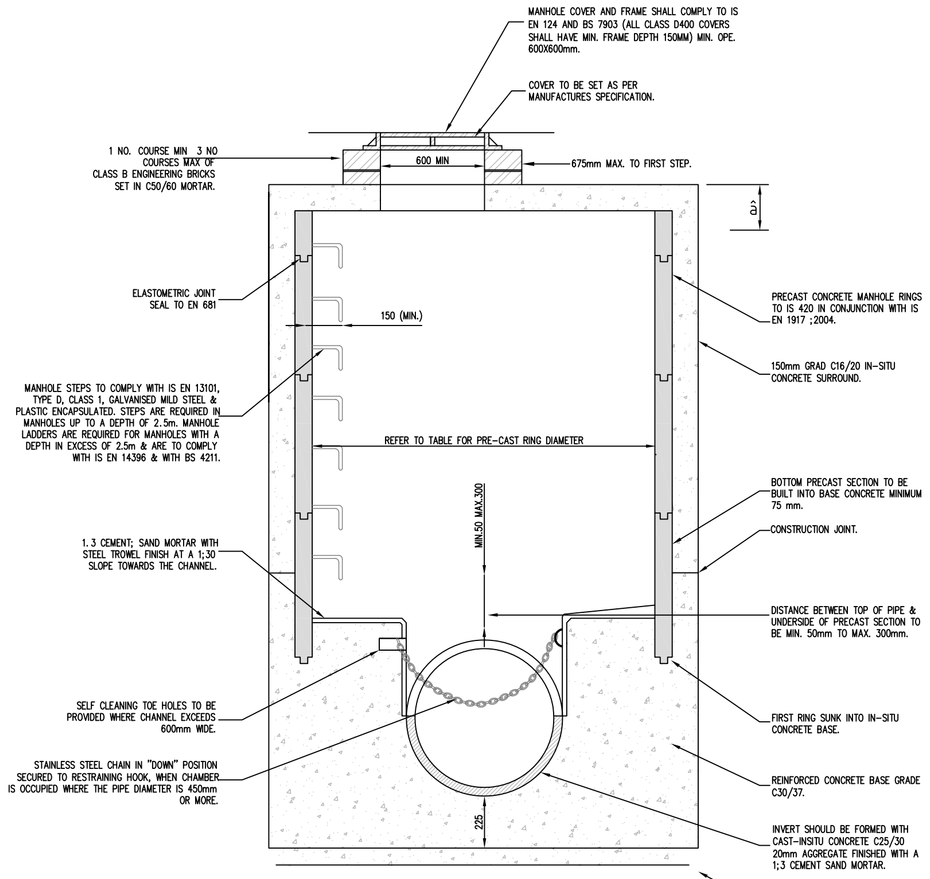

SECTION A-A

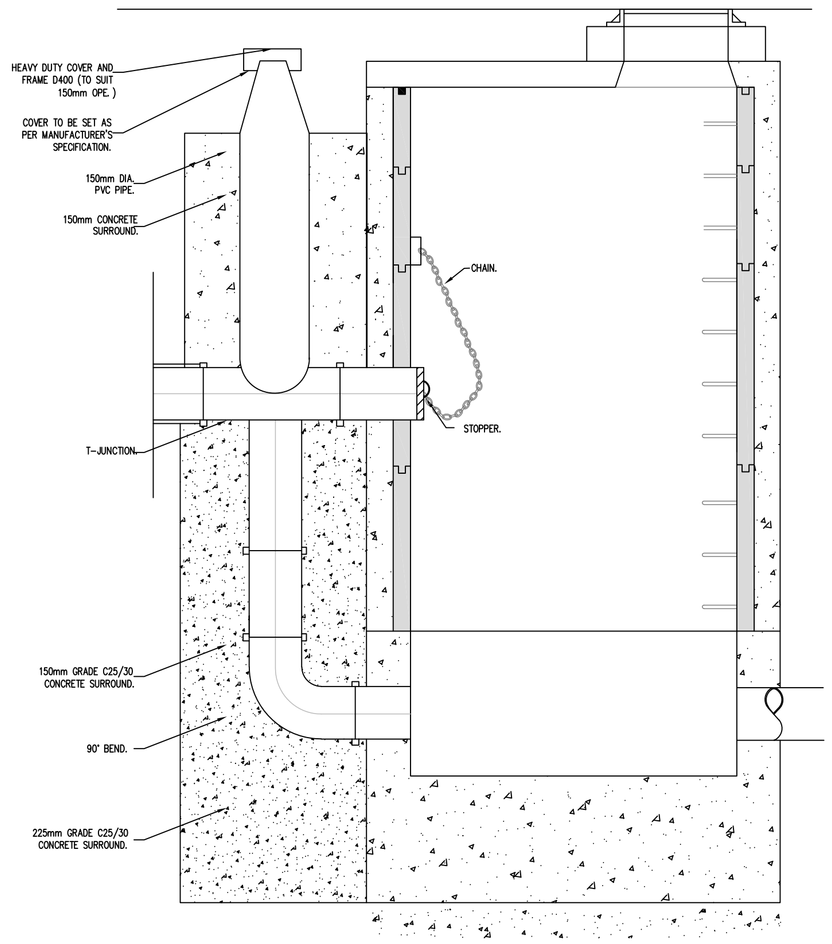

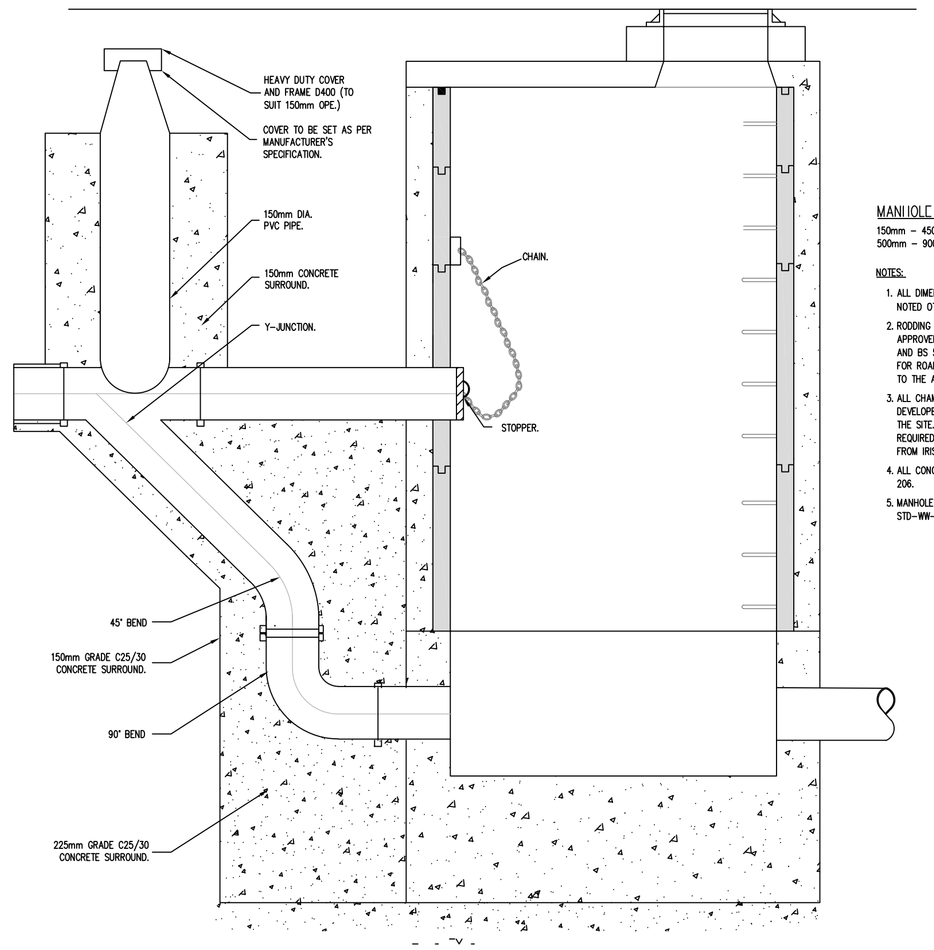

FOUL BACKDROP MANHOLES
(STD-WW-12)
SCALE 1:20

150mm - 450mm (INCL) DROP GREATER THAN 900mm AND LESS THAN 1700mm.
500mm - 900mm (INCL) DROP GREATER THAN 1300mm AND LESS THAN 2300mm.

MANHOLE TYPE
150mm - 450mm (INCL) DROP GREATER THAN 1700mm.
500mm - 900mm (INCL) DROP GREATER THAN 2300mm.

NOTES:

1. ALL DIMENSIONS ARE IN MILLIMETRES (mm) UNLESS NOTED OTHERWISE.
2. RODDING EYE CHAMBER SHALL BE COVERED WITH APPROVED HEAVY DUTY METAL COVERS TO IS 261 AND BS 5834. COVER AND FRAME SHALL BE SUITABLE FOR ROAD AND TRAFFIC CONDITIONS AND IS SUBJECT TO THE APPROVAL OF IRISH WATER.
3. ALL CHAMBERS TO BE CHECKED FOR UPLIFT BY THE DEVELOPER BASED ON GROUND CONDITIONS WITHIN THE SITE. SHOULD ANTI FLOATATION MEASURES BE REQUIRED THEY SHALL BE SUBJECT TO APPROVAL FROM IRISH WATER.
4. ALL CONCRETE TO BE IN ACCORDANCE WITH IS EN 206.
5. MANHOLE DETAILS TO BE IN ACCORDANCE WITH STD-WW-09, 10 AND 11.

MINIMUM MANHOLE DIAMETERS "D"	
DIAMETER OF LARGEST PIPE IN MANHOLE (mm)	INTERNAL DIAMETER OF MANHOLE (mm)
LESS THAN 375	1200
375 TO 450	1350
500 TO 750	1500

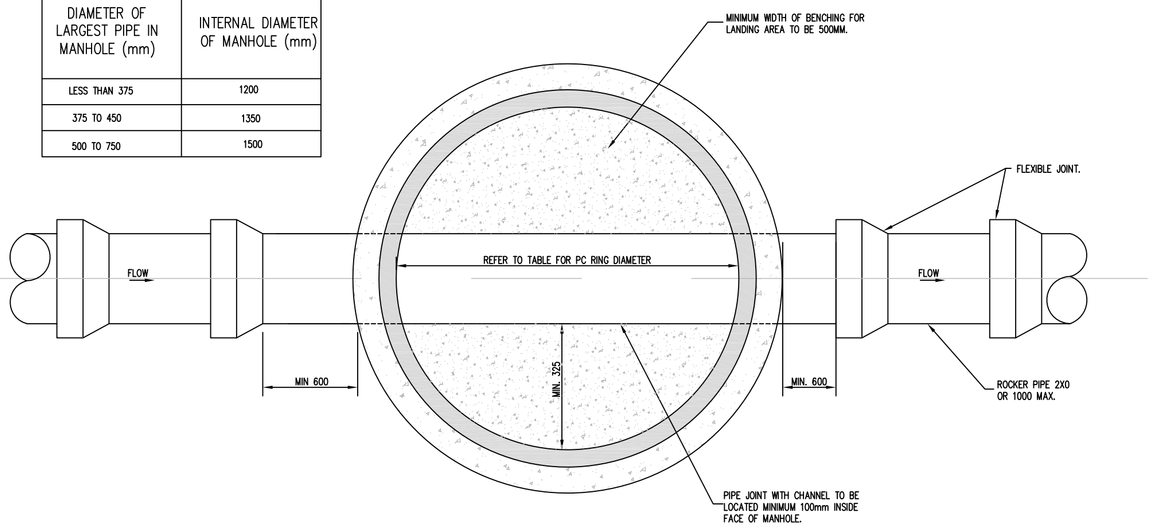

PLAN

MANHOLE TYPE 1 & 4 STANDARD
PRECAST CONCRETE FOUL MANHOLE
(STD-WW-10)
SCALE 1:20

NOTES:
PRECAST CONCRETE MANHOLE (<450mm DIA)
STD-WW-10

1. ALL DIMENSIONS ARE IN MILLIMETERS (mm) UNLESS NOTED OTHERWISE.
2. PRECAST MANHOLES UNITS, COMPLYING WITH REQUIREMENTS OF IS EN 1917 AND BS 5911-PART 3.
3. THICKER MANHOLE BASE REQUIRED FOR SEWERS IN EXCESS OF 3m DEEP WHERE THE SIZE IS GREATER THAN THE STANDARD MINIMUM SIZE
4. APPROVED PRE-CAST CONCRETE BASES MAY BE USED INCORPORATING CHANNELS, BENCHING ETC. SUBJECT TO IRISH WATER APPROVAL AND COMPLYING WITH BS 5911-PART 42002.
5. STRUCTURAL DESIGN AND REINFORCEMENT DETAILS TO BE PROVIDED BY THE DEVELOPER AND SUBMITTED TO IRISH WATER FOR REVIEW.
6. MANHOLES GREATER THAN 3m IN DEPTH WILL REQUIRE A DETAILED STRUCTURAL DESIGN AND BE SUBJECT TO IRISH WATER APPROVAL.
7. MANHOLE ROOFS SHOULD CONSIST OF RE-INFORCED CONCRETE SLAB OF IN-SITU CONCRETE, C30/37, WITH A MINIMUM THICKNESS OF 225mm DESIGNED TO CARRY ALL LIVE AND DEAD LOADS. ALTERNATIVELY APPROVED PRE-CAST CONCRETE ROOF SLABS MAY BE USED SUBJECT TO IRISH WATER APPROVAL AND COMPLIANCE WITH BS 5911 PART 4: 2002.
8. COVER AND FRAMES SHALL BE SUITABLE FOR ROAD AND TRAFFIC CONDITIONS SUBJECT TO APPROVAL FROM IRISH WATER.
9. 200mm ALL AROUND, 100mm DEEP CONCRETE PLINTH WITH PROTECTIVE STAINLESS STEEL METAL BAND AROUND COVERS IN GREEN AREAS.
10. ALL CHAMBERS TO BE CHECKED FOR UPLIFT BY THE DEVELOPER BASED ON GROUND CONDITIONS WITHIN THE SITE. SHOULD ANTI FLOATATION MEASURES BE REQUIRED THEY SHALL BE SUBJECTED TO APPROVAL FROM IRISH WATER.
11. ALL CONCRETE TO BE IN ACCORDANCE WITH IS EN 206; 2013.
12. ANY SPECIAL ROAD REINSTATEMENT AROUND COVER AER FRAME SHALL BE TO ROAD AUTHORITY'S REQUIREMENTS
13. NEW ROAD CONSTRUCTION AND SURFACE FINISH TO BE TO ROAD AUTHORITY'S REQUIREMENTS
14. EXISTING ROAD REINSTATEMENT TO COMPLY WITH CURRENT VERSION OF "GUIDELINES FOR MANAGING OPENINGS IN PUBLIC ROADS" BY THE DEPT. OF TRANSPORT INFRASTRUCTURE IRELAND REQUIREMENTS.
15. IF DEPTH FROM GROUND TO PIPE SOFFIT IS GREATER THAN 6m DEEP, A SITE SPECIFIC ENGINEERED SOLUTION FOR ACCESS SHALL BE PROVIDED.
16. PROPRIETARY WATERTIGHT PCC MANHOLE RING SYSTEMS WITH A WALL THICKNESS≥125mm, & A WATER TIGHT JOINT SEALING SYSTEM, MAY BE USED WITHOUT CONCRETE SURROUND, SUBJECT TO THE GROUNDWATER LEVEL AT THE MANHOLE BEING LOW AND SUBJECT TO REVIEW BY IRISH WATER.

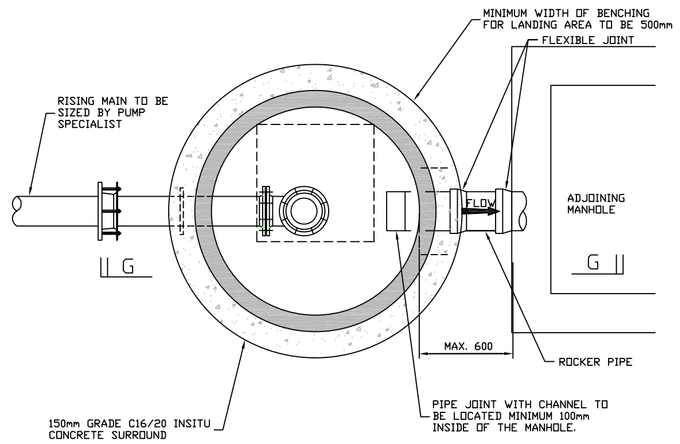

IRISH WATER RISING MAIN DISCHARGE MANHOLE - TYPICAL DETAIL
SCALE 1:20

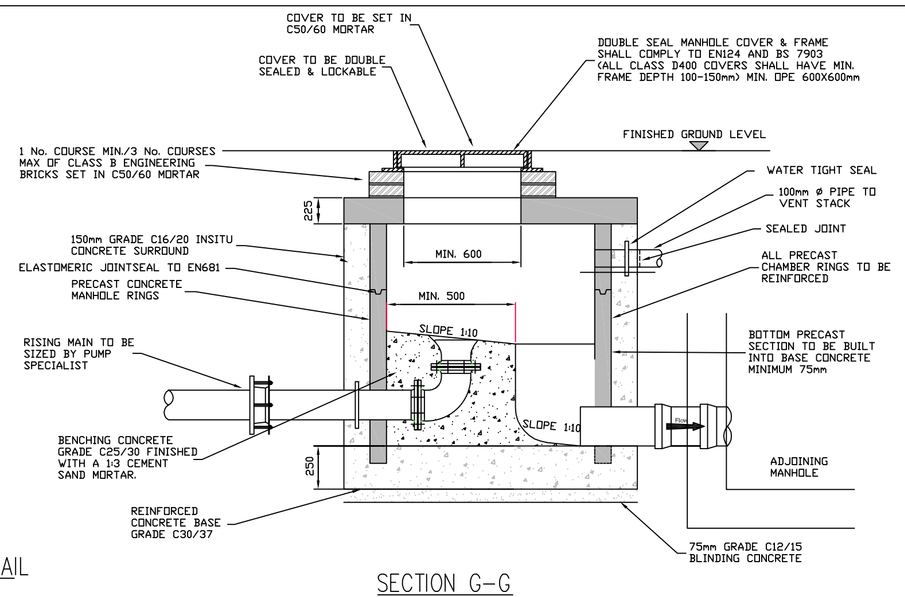

SECTION G-G
SCALE 1:20

DIMENSIONS

Figured dimensions only to be taken from this drawing.
All dimensions to be checked on site.
Architects to be informed immediately of any discrepancies before work proceeds.

© COPYRIGHT

This drawing and any design hereon is copyright of JOR Consulting Engineers and must not be reproduced in whole or in part without their express written consent.

NOTES:

ISSUED FOR
PLANNING

REV	DATE	DETAILS
C01	30.03.22	Issued for SHD Application
P01	23.10.20	Issued for Tender

jor Joseph O'Reilly
Consulting Civil & Structural Engineers
Tel: 046 9077032 Fax: 046 9077932
Email: mail@jor.ie Web: www.jor.ie
Unit 1, St. Therese's Place, Flowerhill, Navan, Co. Meath

CLIENT
Eastwise Construction Swords Ltd

TITLE
Typical Foul Manhole Details

PROJECT
Hartfield Place,
Swords Road, Whitehall,
Dublin 9, D09 C7F8

SCALE	DATE CREATED	DRAWN BY:	DOB
As Shown @ A1	OCTOBER ' 20	CHECKED BY:	MS

DRAWING No.
HARTPL-JOR-SM-ZZ-DR-C-0017

REV
C01